Protectowire Linear Heat Installation Accessories

Part#: SR-502

Strain Relief / Cable Gland.

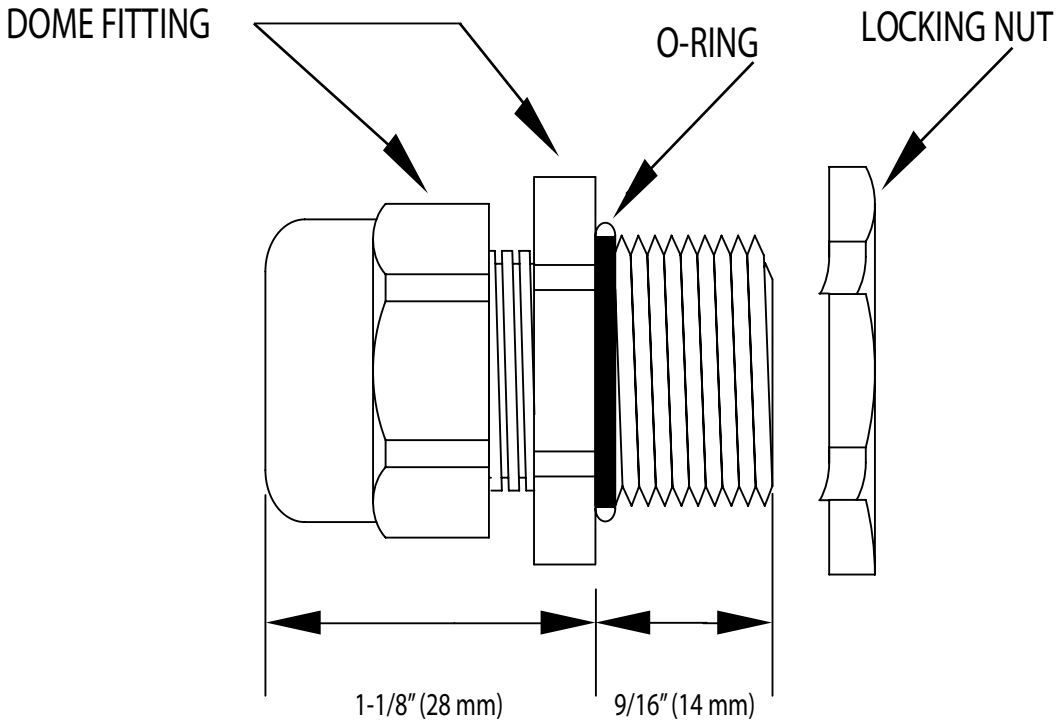

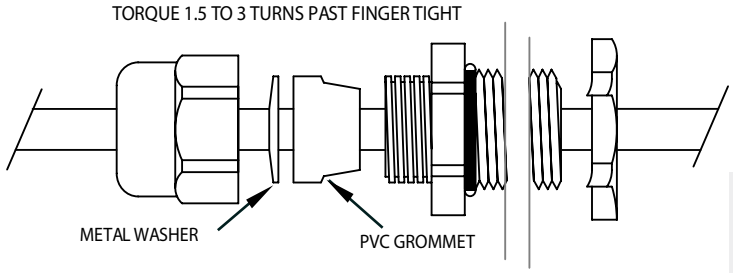

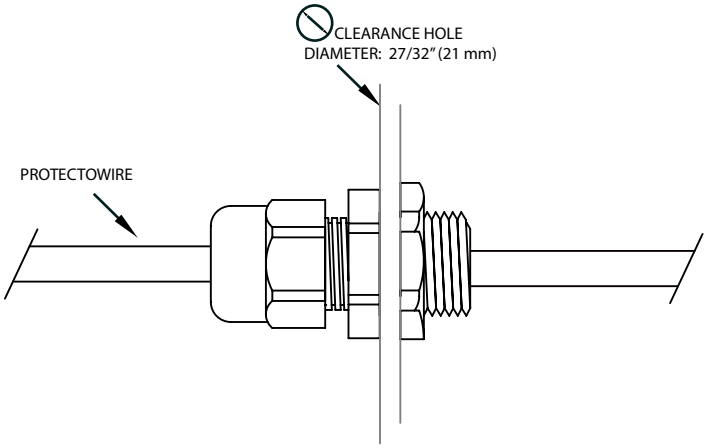

Information

- Material: Iron/zinc plated; PVC grommet
- Temperature: Rated at 194°F (90°C)
- Cable Outer Jacket Diameter Range: 0.10" to 0.20" (2.54mm to 5.08mm)
- Rating : Watertight and oiltight
- Rating: UL Listed NEMA 4 & 6 when installed into a NPT threaded entry or UL Listed conduit hub.
- Thread type size for dome fitting and locking nut is 1/2" NPT.

© 2021, The Protectowire Company, Inc. All rights reserved. ISO 9001 Registered Company